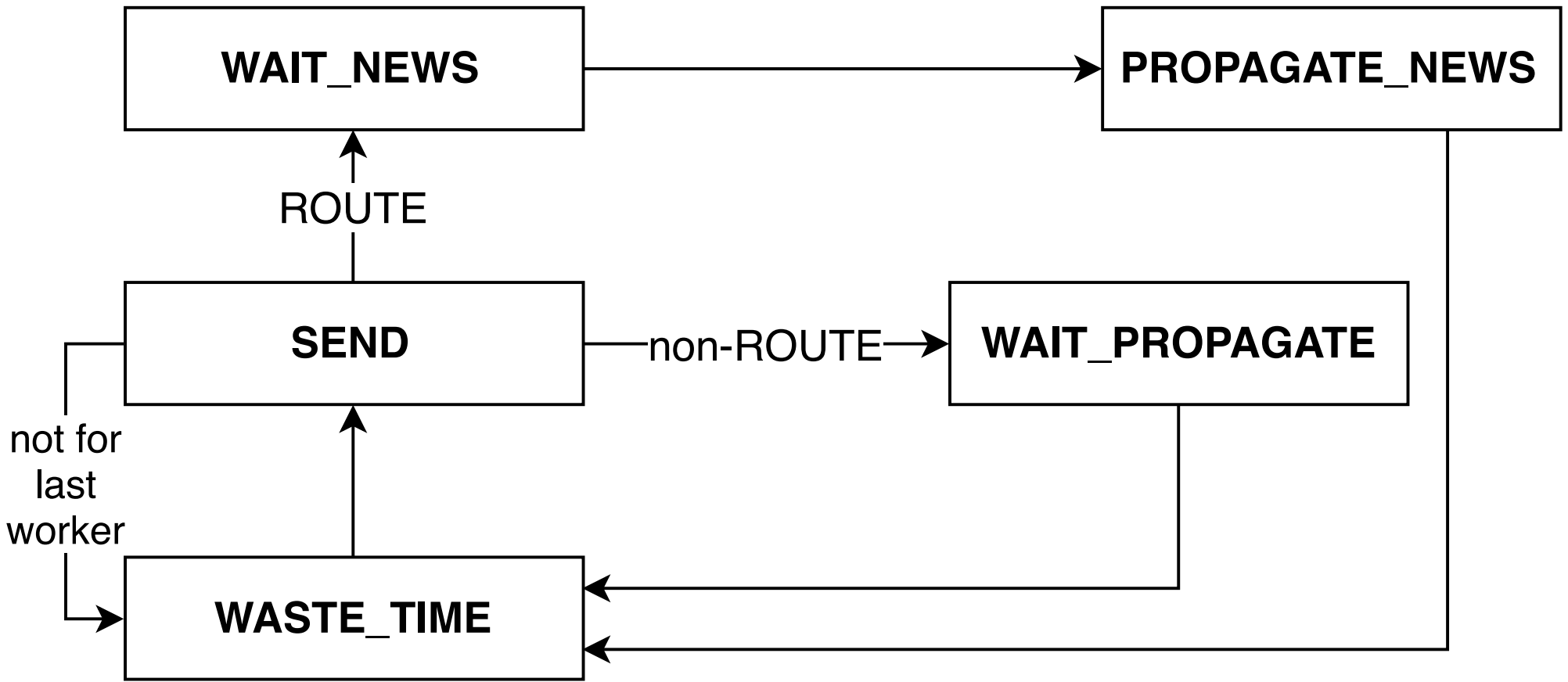
WAIT_NEWS
PROPAGATE_NEWS
ROUTE
SEND
non-ROUTE
WAIT_PROPAGATE
not for last worker
WASTE_TIME